T - J O I N E R

ASY-091

INSTALLATION INSTRUCTIONS

1 Position the wall section against the gondola upright, centered side to side, and adjust the levelers to bring the wall section top spanner flush with the top of the gondola uptight... at the same time, usa a carpenters level on the wall section to level it side to side.

2 Set the 'T' joiner over the gondola and wall section. Secure as shown.

3 Secure the 'T' joiner to the end section top spanner as shown.

ASSEMBLY COMPETE

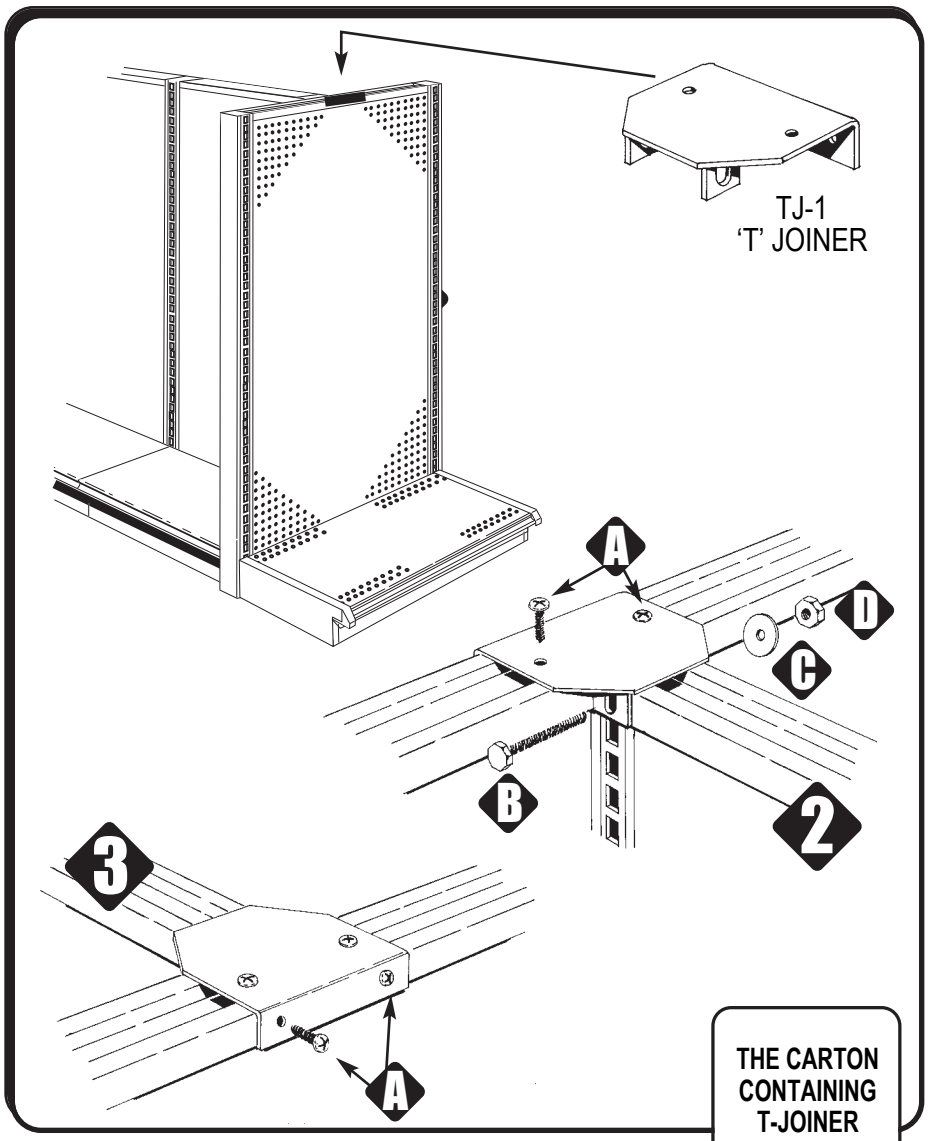

THE CARTON CONTAINING T-JOINER IS LABELED

OPEN 4 FOURTH

TJ-1 HARDWARE PACK

	QTY	ITEM DESCRIPTION
A	4	#10 x 3/4" Phillips truss head, TEK-3, Sheet Metal Screw
B	1	5/16"-18 X 3 1/4" carriage bolt
C	1	5/16" flat washer
D	1	5/16-18 hex nut

A ...indicates item, where used

madix™ STORE FIXTURES
P.O. BOX 729 / TERREL, TEXAS 75160 / 972.563.5744 / 800.776.2349
P.O. BOX 177 / GOODWATER, ALABAMA, 35072 / 205.839.6354 / 800.633.6282

REV A

REV#	ECM#	REVISION	BY	DATE
A	4880	REVISE LAYOUT	ACM	5/2/00

REV#	ECM#	REVISION	BY	DATE